JOSPER MANGAL MGJ

MGJ-132

ACCESSORIES INCLUDED

2 temperature regulation grates · Wire grill rack · 16 GN TRAYS 1/9 · Tongs

TECHNICAL INFORMATION

Braising area	1235 x 490 mm (x4)	48 58 x 19 1/4 in (x4)
Fire up time	20 min average	
Broiling temperature	250 ºC	482 ºF
Charcoal daily consumption	22 to 24 kg	48.5 to 53 lb
Nominal heat output	4 kW	5.4 hp
Net weight	361 kg	795.9 lb

INSTALLATION

Clearance with non-flammable equipment	100 mm	4 in
Clearance with flammable equipment	300 mm	12 in
Exhaust rate	4000 m^3/h	2354 cfm

BUNDLES: SIZES AND WEIGHTS

Sizes bundle	1520 x 1070 x 1830 mm	59 7/8 x 42 1/8 x 72 in
Gross weight bundle	444 kg	978.9 lb

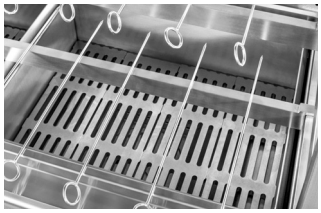

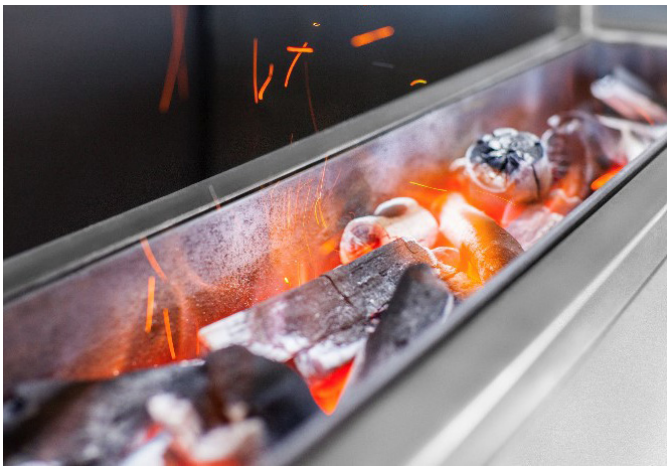

Ed.04.2019 - Josper reserves the right to make modifications to catalogues, pricelists and promotional material according to the development and improvements applied to its equipment.

Josper CHARCOAL EQUIPMENT
THE MIDDLEBY CORPORATION

JOSPER S.A.U. Gutenberg, 11
08397 Pineda de Mar - Barcelona - Spain
T +34 93 767 15 16
josper@josper.es
www.josper.es

JOSPER MANGAL MGJ

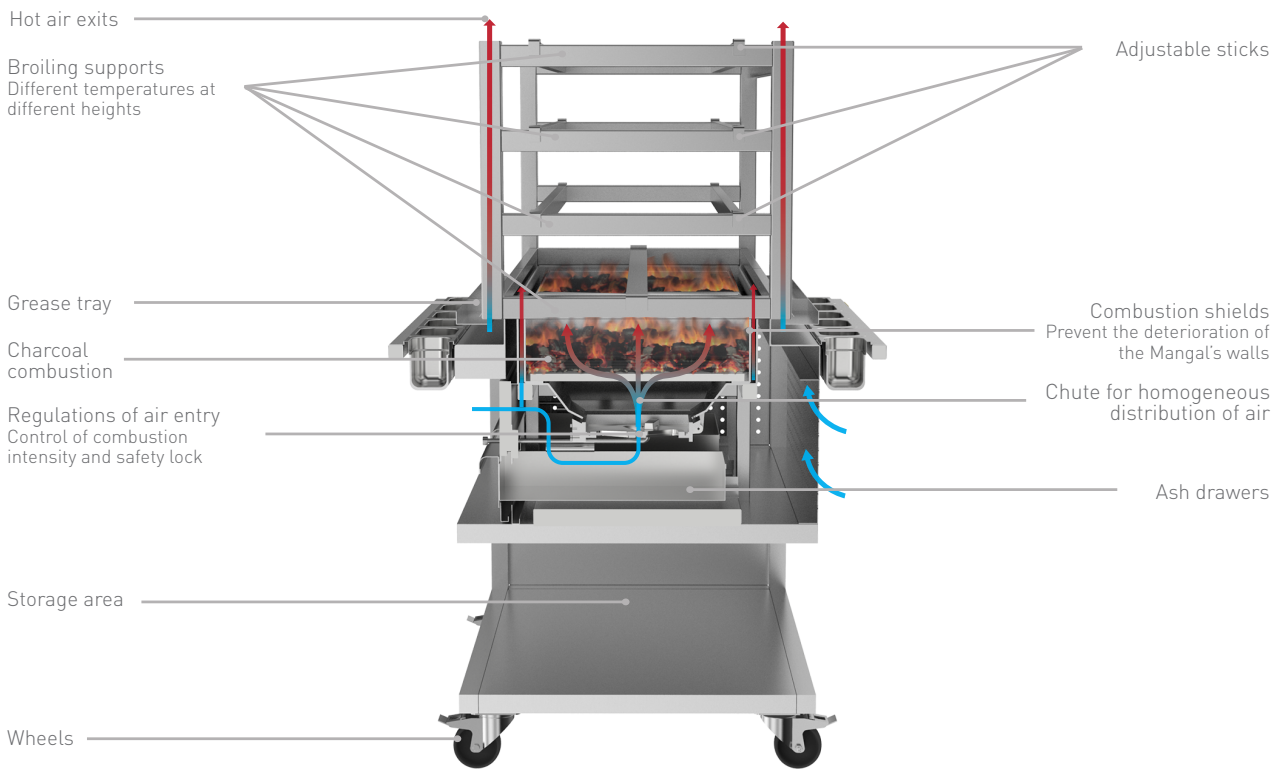

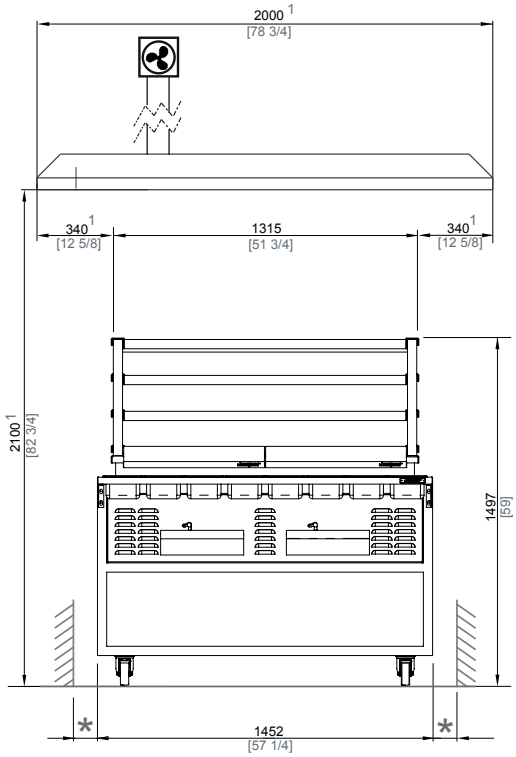

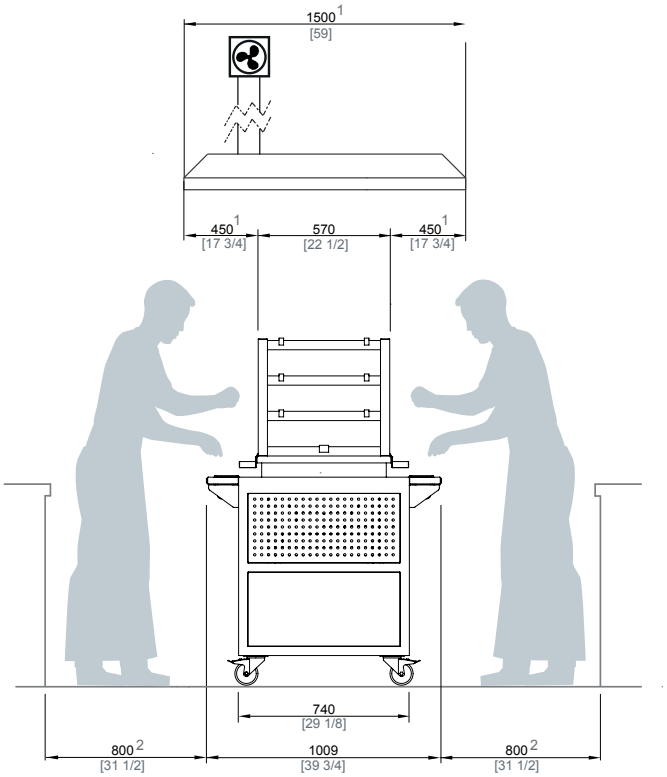

* MINIMUM DISTANCE TO FLAMMABLE ELEMENTS: 300 mm [12 in] / RECOMMENDED DISTANCE TO ANOTHER ELEMENTS: 100 mm [4 in]

1 RECOMMENDED HOOD'S MINIMUM DIMENSIONS

2 RECOMMENDED CHEF'S WORKING SPACE

[mm / in]

Josper® CHARCOAL EQUIPMENT
THE MIDDLEBY CORPORATION

JOSPER S.A.U. Gutenberg, 11
08397 Pineda de Mar - Barcelona - Spain
T +34 93 767 15 16
josper@josper.es
www.josper.es

FCS FOODSERVICE CONSULTANTS SOCIETY INTERNATIONAL
AB28
AEFECC
TÜVRheinland CERTIFICADO
Sistema de Gestión ISO 9001:2008
INNOVATIVE SME